Dimensional metrology

T&S
just measure

Contents

T&S Gesellschaft für Längenprüftechnik mbH			
Mission statement	–	Just measure	5
Quality assurance	–	Focusing on the essentials	7
The better way / Providing the best solution	–	Contour measurement – off the beaten tracks	9
Our ConturoMatic Systems			
ConturoMatic TS	–	The result	12
ConturoMatic TS	–	Expansions	15
ConturoMatic Roughness	–	Assessable parameters	16
ConturoMatic QR-Code Toolkit	–	Just measure – even easier	17
ConturoMatic GS / GM-X	–	The most effective way to measure threads	18
ConturoMatic TS-X / TS-XL	–	Measurement technology for highest demands	20
ConturoMatic TS-X *move*	–	Large-format precision	22
ConturoMatic CV120	–	Our small one for the big tasks	24
ConturoMatic CV300	–	Our big ones for measurement labs and production monitoring	26
Just rent			
ContuRent	–	Renting instead of buying – a concept that pays off	28
Evaluation software			
ConturoMatic S1	–	Description / Function excerpt	30
Styli			
CS ceramic styli	–	The connection between the surface and measuring device	32
Standard styli	–	Summary of our standard stylus tip collection	33
Tracing arms			
Standard tracing arms	–	Excerpt from our comprehensive range of products	34
Technical specifications			
ConturoMatic Systems	–	TS/GS, TS-X (HD)/GM-X, TS-XL, TS-X *move*, CV120, CV300	35

Accessories			
Quality assurance	–	Far more than just the use of suitable measuring equipment	36
T&S centering- & clamping devices			
How does the workpiece get onto the measuring instrument?			38
Universal centering system	–	UZ Series	40
External centering system	–	AZ Series	42
Centering and leveling table	–	KZT Series	42
Centric clamping vice	–	ZS Series	43
Angle-adjustable workpiece fixture	–	WSE Series	44
Angle-adjustable chuck	–	WSF Series	44
Prismatic-shaft support	–	WP/WPS Series	45
Radial-rotary unit	–	SG and DP Series	45
Vacuum clamping systems	–	VZ Series	46
Calibration standards			
Contour- and roughness standards	–	Introduction	47
KN180	–	Contour standard	47
KN85	–	Contour standard	47
KRN60	–	Combined contour and roughness standard	47
KN15	–	Micro contour standard	47
Commutator testing systems			
CommutatorMatic mechanics and sensor technology			48
Software „kommuator.info“			48
Customised Solutions			
Individual solutions according to customer requirements			49
T&S Customer Service			
After Sales Service	–	Assistance when it matters	50

WE

Passion –
we love our job!

Rethink existing
solutions.

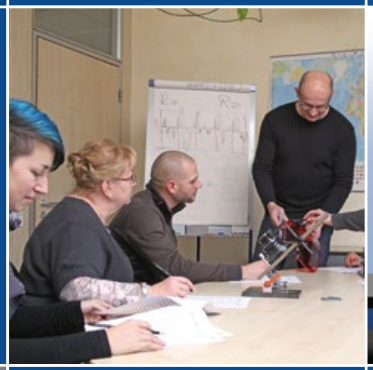

Extract
relevant needs.

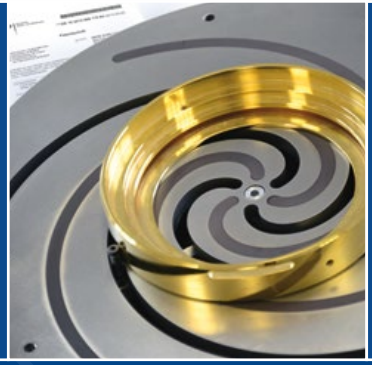

Explore
new solutions.

Just measure

Our main goal is achieving your satisfaction and appreciation while working together. A large part of this process consists of using your feedback to create new solutions or adapt existing solutions as needs change. The more we can help you find the right solutions and contribute to your goals, the more successful we are.

Robert Schmidt – CEO

Our work is guided by the following principles:

- **Quality and reliability**
  Our solutions are used where quality and precision can make or break your product. We take this responsibility very seriously.
- **Trust is the keystone of our operation**
  You get to know us the way we are: competent, reliable, friendly and respectful.
- **Social responsibility**
  ConturoMatic – „Made in Germany“: We make a conscious effort, within the company, to use components and services from local partners within the region where possible.
- **Lasting involvement**
  We help and support people. Not just with words, but deeds.
- **Continuity and growth**
  Consistent and continuous development improves the quality of our systems, thereby we are securing the future success of our clients and the future of T&S.
- **You can count on us**
  We stand for quality, service, innovation and fair prices; today and in the future, and we are proud of that.

Robert Schmidt – CEO

Focusing on the essentials

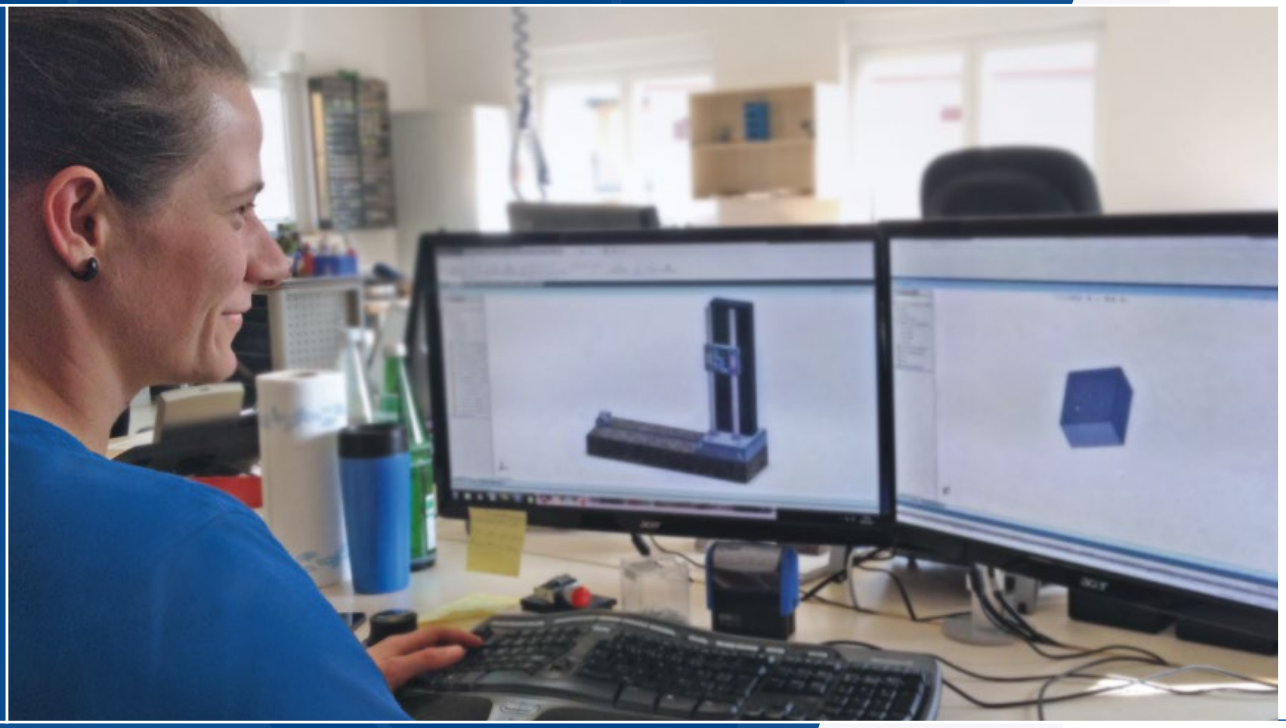

Quality Assurance

is far more than the use of suitable measuring equipment

T&S Gesellschaft für Längenprüftechnik mbH is a globally operating manufacturer of measuring instruments, solutions provider and project service provider for small to complex, needs-optimised auxiliary systems.

Take a closer look at our professional system solutions. Discover new potential for yourself, your costumers and your employees. Working together using our know-how and your experienced input motivates and helps us continually to develop and improve our systems.

T&S-solutions are used where your products are clearly distinguished by quality and success. By consistent further development and use of the possibilities from our state-of-the-art 3-D CAD software, we continuously improve the quality of our systems. In this way, we secure the future success of our customers – and the future of T&S.

The result – a comprehensive range of accessories and auxiliary devices to resolve your measurement tasks.

Our facility is outfitted with the newest equipment including a fully climate controlled 700sqm production area. In order to ensure the quality of our products, we use some of the latest testing equipment e.g. a laser interferometer with an accuracy in the sub-micron range. Of course, variables like temperature, atmospheric pressure and humidity need to be compensated when measuring at that accuracy range. Furthermore, we use various calibration standards (in accordance with VDI/VDE guideline 2629 Page 1): reference spheres, glass hemispheres, gauge blocks and straigthness standards.

The professional qualification of our employees is particularly important to us

At T&S our employees stay up to date with courses for new developments and regular refresher courses. This ensures excellent service and high quality products.

The following pages contain an extract of our extensive range of contour measuring instruments, accessories, specialized measurement technology and application-specific solutions.

The better way –
providing the best solution

Contour measurement – off the beaten tracks

The connection between the X- and Z-measuring axes in a drive unit always leads to narrow tolerances.

Our solution: separation of X and Z.

The X-axis assumes the function of a workpiece mount while the Z-axis performs the scanning movement. Since both axes are motor controlled, this leads to enormous benefits. Independent of the contour incline, both axes are controlled to keep the measurement speed constant. Classic combined drive units only move at constant speeds along X, which invariably leads to increased measuring point distances along steep contour sections. This irregularity in data point equality always leads to mathematical problems that can only be solved with interpolation (algorithmically generating interim values).

Our solution automatically leads to more consistent data point distances. Calculation of results therefore always takes place using real, physically recorded, measured values.

Furthermore, the guidance of the Z-movement follows a straight line. There is no limitation of the measuring path anymore, as is caused by the circular motion of the tracing arm of conventional drive units. Our tracing arm is almost always set horizontally. The stylus tip can follow the contour dynamically throughout the measuring range of up to 280 x 350 mm, and the scanning conditions are uniquely defined within the entire measuring range. Since the stylus tip position is precisely defined and repeatable within a fraction of a millimeter, secure and automatic measurement is possible even in the smallest of bores.

Additionally, guide deviations of the Z-axis, which commonly result in measuring errors due to the lever effect of the tracing arm length, are automatically compensated for by our concept.

The easy way to measure contours

Our ConturoMatic-Systems

It was an ambitious aim and great responsibility to develop a series of outstanding measuring devices that can be used in a production environment and in the measuring laboratory because of their extreme flexibility and high performance. Development is always focused on you, the user and technician, in measurement technology.

The result is a new generation of contour measuring systems: the ConturoMatic series.

This kind of development always brings many people together and in the end, all involved parties can be proud of the results. It is part of our philosophy to let you, as our customer, contribute to this success. Your competence and suggestions help us to continually develop and optimize T&S systems further.

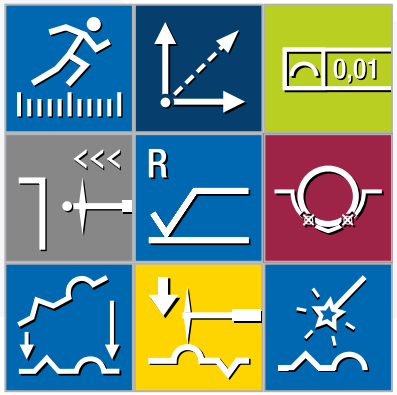

All ConturoMatic-Systems are built using the same software base.

Therefore, any expansions or innovations are automatically usable on all systems. Simple operation and high flexibility at a fair price are our top priorities.

We are able to offer optimized systems to measure nearly all ranges of contour and roughness.
The application range of our ConturoMatic systems comprises both, classic models with drive units, motorized columns and a group of high-end devices with aerostatic guide units and high accuracy.

The Result –

More than the sum of individual ideas

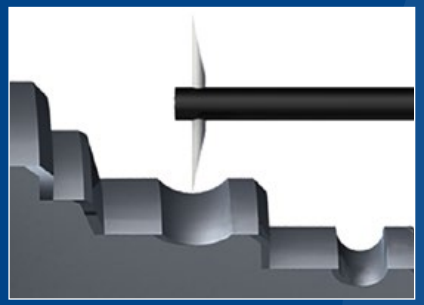

The concept behind all of the ConturoMatic TS systems mainly comprises two motor-controlled measuring axes. The X-axis carries the sample and the Z-axis scans the contours. Both measured value acquisition and machine control are consistently based on the latest digital technology. The mechanical basis is granite of the highest quality.

The effect:

Due to the use of precision parts within our systems, there is no need for expensive and overly complicated error correction. Stability and longevity are basic elements of our ConturoMatic products. **New, different, innovative and technically revolutionary.**

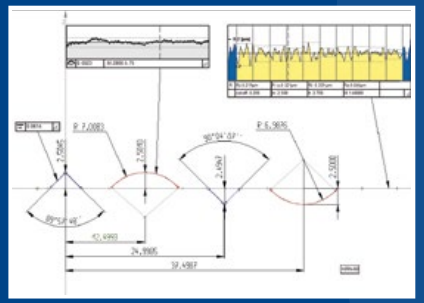

Technical TS highlights:

- Robust mechanical base
- Wide measuring range 250 x 320 (TS), 280 x 350 (TS-X)
- Guide elements made of granite, are the basis for highest guiding accuracy
- Motorized Y-adjustable table's automatic cresting function finds highest and lowest point (optional)
- Motor-controlled measuring axes
- Permanent dynamic speed control. This results in the distance between data points remaining constant, regardless of profile inclination
- Non-contact incremental linear scales. Our scales are like steel when it comes to thermal behavior. Therefore, temperature compensation or extensive climate control are not necessary in most cases
- Integrated control electronics
- Data acquisition and control via standard interfaces guarantees future use and independence from changing computer hardware
- No relevant radial movement of the tracing arm
- Unique horizontal position of the tracing arm allows easy and safe access to inspect the piece at any time
- Accuracy: ± (0.9 + L/100) µm [L = measurement displacement in mm] (ConturoMatic TS)
- Accuracy: ± (0.85 + L/100) µm [L = measurement displacement in mm] (ConturoMatic TS-X)
- ConturoMatic software compatible with: Win10/64Bit

ConturoMatic
TS

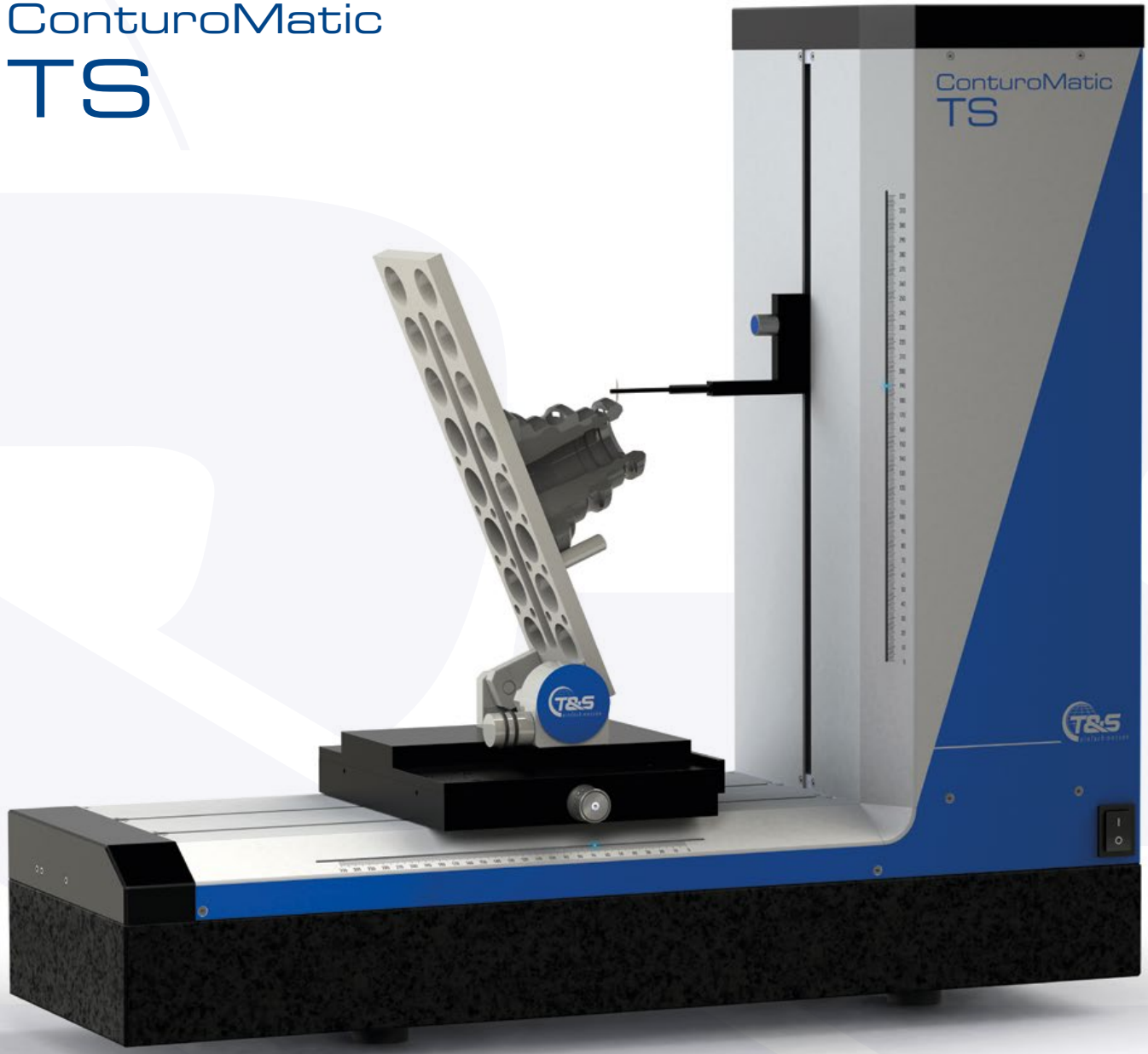

Your needs are growing?
ConturoMatic TS grows with you

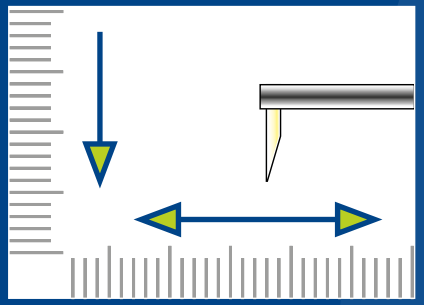

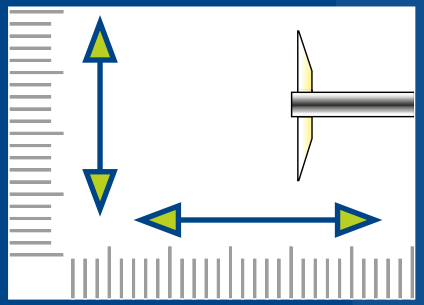

The modular concept allows cost-effective entry to the **TS class** with the option to retrofit additional functions at any time. With no mechanical intervention in the existing system; simply by software activation. The extension packages, which are available on an optional basis, contain all the necessary components, such as tracing arms for up/down scanning or roughness sensor with diamond tip.

The technical innovations that make our new **TS system** the best device in its class include the integrated, maintenance-free, electro-mechanical system for tracing force adjustment. Using this function, the tracing force can be adjusted for the contour and roughness operation. These settings are individually configured for each tracing arm, managed by the software and automatically adjusted according to the required measurement function. To calibrate the tracing arm and the offset between the upper and lower stylus tip, only the ball standard, which is included in the scope of supply, is required.

Due to the geometrically precise horizontal position of the tracing arm, it is possible to check contours and bores with a diameter of less than 2 mm to more than 300 mm.
Breakage of the stylus tip is minimized by the integrated safety shutdown of the Z-axis movement. The roughness analysis option, which is realized through the integrated measuring force setting, can be used in combination with the contour analysis. In many cases this makes further measuring superfluous. Contour and roughness results can effectively be determined in a single step.

Other tasks that can be performed by our **ConturoMatic-TS** include the analysis of bores, distances from inner to outer contours, threads, taper angles and parallelism, profile defects and the measurement of discontinuous surfaces, with no loss of reference measurement.

Extensions

All options can be combined as desired

Option UD (Up/Down):

This function allows switching of the scanning direction with no loss of reference, e.g. to define bores or reference measurements from outer to inner contours. This function is also available in combination with roughness analysis and can be integrated into automated measurement sequences.

Additional evaluation options:

- Determination of raceway diameters
- Diameter determination
- Wall-thickness variation
- Parallelity measurement
- Taper-angular measurement
- Slope determination
- Thread measurement (evaluation software optional)

Option R (roughness):

Software option for calculating the surface roughness. For a full list of assessable parameters see page 16.

- Measurement of surface roughness by means of reference surface measurement
- Contour + roughness measurements can be combined under "multi contour"
  This function is also available in combination with the option UD described above
- Roughness evaluation can also be integrated into automated measurement sequences

Option motorized Y-table:

While manual adjustment is still possible the motorized Y-adjustable table's automatic cresting function can find the highest or lowest point with the press of a button in the software. Y-adjustment range ist 17 mm.

Table load capacity: TS, TS-R, TS-UD, TS-UDR = 35 kg, TS-X = 25 kg, TS-XHD = 50 kg
The Y-search range can be adapted to avoid probe damage in small bores or narrow measuring points.

Benefits:

- User-independent calculation of reversal points with high precision
- Minimizes measurement errors due to upper and lower stylus tip axle offset
- Automatic identification of convex and concave reversal points
- The automatic cresting function can be used when measuring from above and below

Thread analysis:

Software option for evaluating the characteristic values of threads and thread gauges.
Usable with ConturoMatic TS-X/TS-UD/TS-UDR/T3/T1/T1-R.

Overview of the included standards:

- Metric ISO threads in accordance with DIN ISO 1502:1996 (DIN ISO 965:1998)
- Gauges for metric ISO-threads in accordance with ANSI B1.16M-1984
- Metric ISO trapezodial threads in accordance with DIN103:1997
- „Unified" thread or thread gauges in accordance with ANSI/AMSE B1.1-1983/B1.2-1983
- Thread gauges for „Unified" (ANSI/ASME B1.1) in accordance with BS 919:Part:1960
- Gauges for pipe threads in accordance with DIN ISO 228:2000
- Gauges for pipe threads in accordance with DIN 259:1979(alt)
- Armoured conduit thread in accordance with DIN 40430, DIN 40431:1972
- Gauges for round threads in accordance with DIN 405:1997
- Whitworth thread or thread gauge in accordance with BS 84:1956/BS 919: Part2:1971
- NPSM thread in accordance with ANSI/ASME 1.20.1-1983
- Betress thread in accordance with DIN 513:1985/company standard
- MJ thread in accordance with ISO 5855:1989
- Gauges for thread inserts (HeliCoil) in accordance with DIN 8140:1999(EG thread)
- Metric and „Unified" thread in accordance with Böllhoff company standard
- Valve thread in accordance with DIN 7756:1979 and ETRTO V.7
- ACME thread in accordance with ASME/ANSI B1.5-1988
- Stub ACME thread in accordance with ASME/ANSI B1.8-1988
- Thread for bicycles in accordance with DIN 79012
- Adjustment gauges for thread measuring devices in accordance with DIN 2241
- Further threads on request

Data export (optional):

Optional software to convert created data using ConturoMatic systems to qs-STAT (Q-DAS ASCII transfer format)[1]. ConturoMatic measurement data can be converted and exported in a readable format e.g. Q-DAS.

Benefits:

- No additional program needed for the conversion. The function is integrated in the main program
- Largely freely defineable fields (K-fields)
- Transfer of values (actual and setpoint value, tolerances) from the ConturoMatic software
- Header data (e.g. order number, drawing number, etc.) are taken from the ConturoMatic software
- Path for saving the DFQ-file freely defineable
- Retrofittable for all ConturoMatic systems

[1] *Certification of the converter by Q-DAS is not provided.*

ConturoMatic Roughness

Contour and roughness measurement in one step

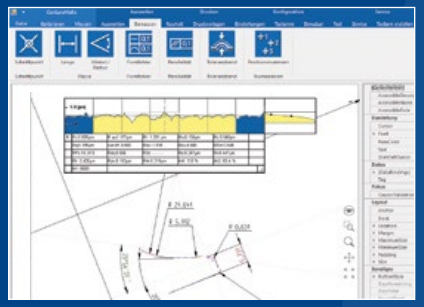

Modern contour measuring systems increasingly allow the acquisition and calculation of roughness parameters.
The roughness measurement of inclined contours is increasingly pushing previous scanning and evaluation methods to their limits. To solve this problem, our calculation algorithms have, from the start, been based on orthogonal regression. This method, in connection dynamic speed control, which ensures even data point distance, leads to perfectly precise results – even on tilted surfaces.
With conventional solutions, on the other hand, to achieve a constant measuring point distance, new measuring points that do not actually exist must be generated by interpolation.

With our optional surface roughness software update for the ConturoMatic TS, your contour measuring system turns into a particularly high-performance system for surface & contour measurement.

All common parameters can automatically be measured and evaluated. The software is seamlessly integrated into the standard software and can be operated intuitively. It is also possible to update any previously delivered **T1, T2 and TS system**. The update includes a software for surface roughness evaluation, a roughness tracing arm with 2 µm tip radius and 60° angle as well as a comprehensive operating manual. The roughness option is included as standard for the **ConturoMatic TS-X**.

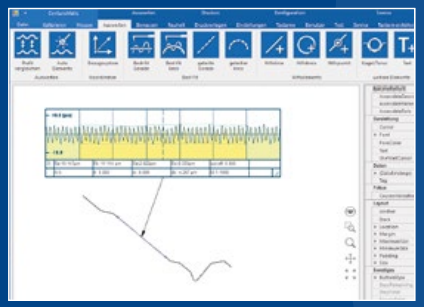

Evaluable Parameters:

- Pt, Pz, Pa, Pc, Pq, Pp, Pv, Psk, Pku, PSm, Pdq, Pmr(c)
- Rt, Rz, Ra, Rc, Rq, Rp, Rv, Rsk, Rku, RSm, Rdq, Rmr(c), Rk, Rpk, Rvk, Mr1, Mr2, RPc, Rmax (VDA 2006), R3z (DB factory standard)
- Wt, Wz, Wa, Wc, Wq, Wp, Wv, Wsk, Wku, WSm, Wdq, Wmr(c)
- Optional: Dominant waviness according to VDA 2007
- Optional: Robust Gaussian filter according to DIN EN ISO 16610-31 (03/2017)

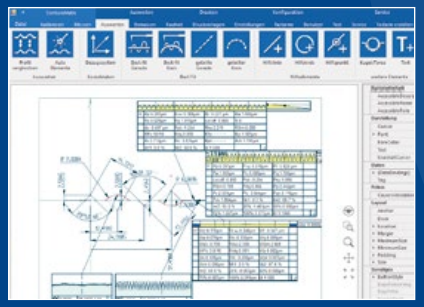

Applied standards for testing surfaces:

- DIN EN ISO 4287:2010-07
- DIN EN ISO 4288:1998-04
- DIN EN ISO 16610-21:2013-06
- DIN EN ISO 13565-1:1998-06
- DIN EN ISO 13565-2:1998-06
- DIN EN 10049:2014-03
- DIN EN ISO 16610-31:2017-03 *(Option)*
- VDA 2006:2003-07
- VDA 2007:2007-02 *(Option)*
- DB N 31007 (1983)

By means of user settings, evaluations deviating from the standard can also be made.

ConturoMatic
QR-Code Toolkit

Just measure – even easier

Our **QR-Code Toolkit** considerably simplifies operation, especially in the field of production monitoring. Standard functions such as tracingarm selection or activation of automated measuring programs can be started using a **QR-Code scanner** with a single click.

The following functions are implemented in the QR-Code Toolkit:

- Reading of probe codes for direct activation of a probe.
- Reading of reference part codes to select any desired reference part.
  The assignment of the QR-Code to the reference part is done via an assignment file in which the QR-Code number can be assigned to any reference part name.
- Reading of reference part codes and automatic start of the measurement.
  The assignment of the QR-Code to the reference part is done via an allocation file in which the QR-Code number can be assigned to any reference part name.

Application example:
The measurement can be started by means of a QR-Code attached to a fixture and then runs automatically.

Scope of delivery:

- ConturoMatic Software Option QR-Code Toolkit
- QR-scanner with USB interface
- QR-Code sticker set for probe selection
- QR-Code sticker set for reference part selection
- QR-Code sticker set for reference part selection + Autostart

ConturoMatic Thread Scanner

The most effective way of thread measurement

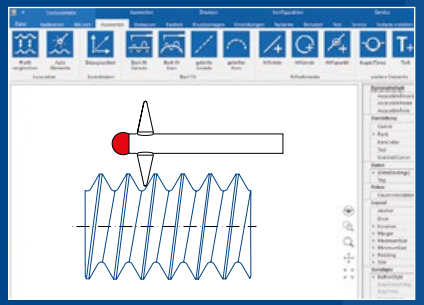

The increasing demand for precision, the necessity to guarantee the function and safety of bolted joints and the requirements of the new IATF 16949, require measuring methods which cannot be guaranteed with the thread testing, which is mainly carried out by gauge testing or the 3-wire measuring method. Based on our proven **T-Series** contour measuring devices, we have developed systems that enable efficient and cost-effective testing of gauge and functional threads with maximum effectiveness and accuracy.

The enormous flexibility of our systems in the field of contour and roughness measurement is also available. The range of application of our „**ConturoMatic GS**“ thread scanners, which have been specially optimised for thread testing and the air-bearing „**ConturoMatic GM-X**“ ThreadMaster, which meets the highest demands, fulfill all the requirements that a modern and flexible thread measuring system must offer. The scope of delivery is adapted to the specific requirements of thread testing and includes a mandatory double cone stylus, a fixture for thread plug gauges and the software for the evaluation of cylindrical threads. With our optional software, the simple measurement of common tapered threads can be carried out.

Both systems are ideally suited for use in calibration laboratories certified according to DIN EN ISO/IEC 17025:2018-03 and also in series production.

With our innovative, patent pending „Test method for small internal threads“, internal threads up to M1.6 can be tested.

Evaluable thread types:

- Metric ISO threads according to DIN ISO 1502:1996 (DIN ISO 965:1998)
- Gauges for ISO metric threads according to ANSI B1.16M-1984
- Metric ISO trapezoidal thread according to DIN103:1997
- „Unified“ threads or thread gauges according to ANSI/AMSE B1.1-1983/B1.2-1983
- Thread gauges for „Unified“ (ANSI/ASME B1.1) to BS 919:Part:1960
- Gauges for pipe threads according to DIN ISO 228:2000
- Gauges for pipe threads according to DIN 259:1979(old)
- Armoured pipe thread according to DIN 40430, DIN 40431:1972
- Gauges for round threads according to DIN 405:1997
- Whitworth threads or thread gauges to BS 84:1956/BS 919:Part2:1971
- NPSM thread according to ANSI/ASME 1.20.1-1983
- Saw thread according to DIN 513:1985/factory standard
- MJ thread according to DIN ISO 5855:1989
- Gauges for thread inserts (HeliCoil) according to DIN 8140:1999(EG thread)
- Metric and „Unified“ HeliColi threads according to Böllhoff factory standard
- Valve thread according to DIN 7756:1979 and ETRTO V.7
- ACME thread to ASME/ANSI B1.5-1988
- Stub ACME thread according to ASME/ANSI B1.8-1988
- Thread for bicycles according to DIN 79012
- Setting gauges for thread gauges according to DIN 2241

Software for calculation of taper threads *(optional)*:

- according to DIN 2999
- ANSI/ASME B1.20.1 (NPT)
- BS 21, ISO 7-2
- ASME B1.20.5-1991 (NPTF)

ConturoMatic
GS/GM-X

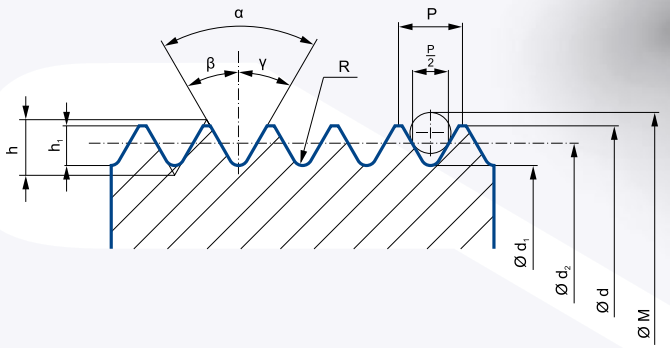

Measurement
technology for highest demands

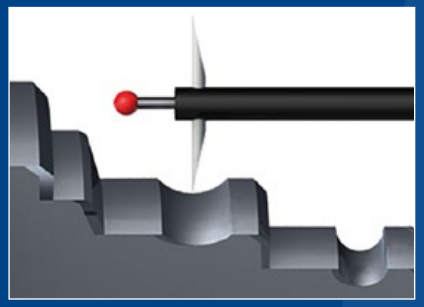

Our proven concept: "Contour and roughness measurements at the highest level" is what keeps us developing new systems. This philosophy has driven us to reanalyze every element of our **ConturoMatic TS** to reach a new level of system accuracy.

Detailed fine-tuning of the guides, aerostatic air bearings, high-speed data transfer, fast reaction axis tracing, optimized tracing arm bearing, newly developed drive units and incremental scales of the highest quality are the results of a comprehensive, ever evolving, development process.

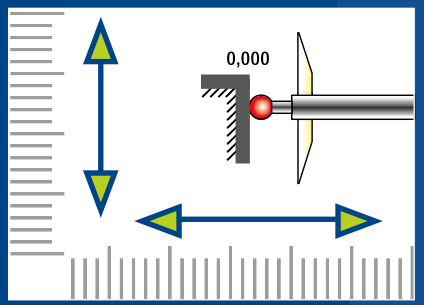

Overview of the performance features of TS-X/TS-XL:

- Friction-free, aerostatic special air bearings in the X and Z axis
- Measuring range TS-X: 280 x 350 mm
- Measuring range TS-XL: 360 x 550 mm
- Hybrid ceramic probe arm bearing
- Static probing and measurement data acquisition in X direction
- Roughness testing module in the standard scope of delivery
- Table load capacity: 25 kg (optionally up to 50 kg)
- Y-table manually and motor-driven adjustable
- Non-contact, incremental measuring systems based on steel
- Measuring system resolution: 1 nm
- Outstanding price-performance ratio
- Error limit: ± (0.85 + L/100) µm [L = measuring path in mm] (without changing the scanning direction)
- Combined contour and roughness measurement throughout the measuring range possible
- Software basis ConturoMatic: W10/64Bit

ConturoMatic TS-X/TS-XL Roughness:

- Measurement of surface roughness (mechanical principle of reference surface measurement)
- Measuring range roughness TS-X: 280 x 350 mm
- Measuring range roughness TS-XL: 360 x 550 mm
- Effective resolution: 1 nm
- Measuring speed: 0.1-0.5 mm/s
- Measuring force: 7.5 mN (variably adjustable)
- Measuring point distance: approx. 0.5 µm
- Suitable for roughness: Rz > 0.5 µm, Ra > 0.05 µm
- Accuracy: 5%

See page 16 for a description and scope of functions.

ConturoMatic
TS-X / TS-XL

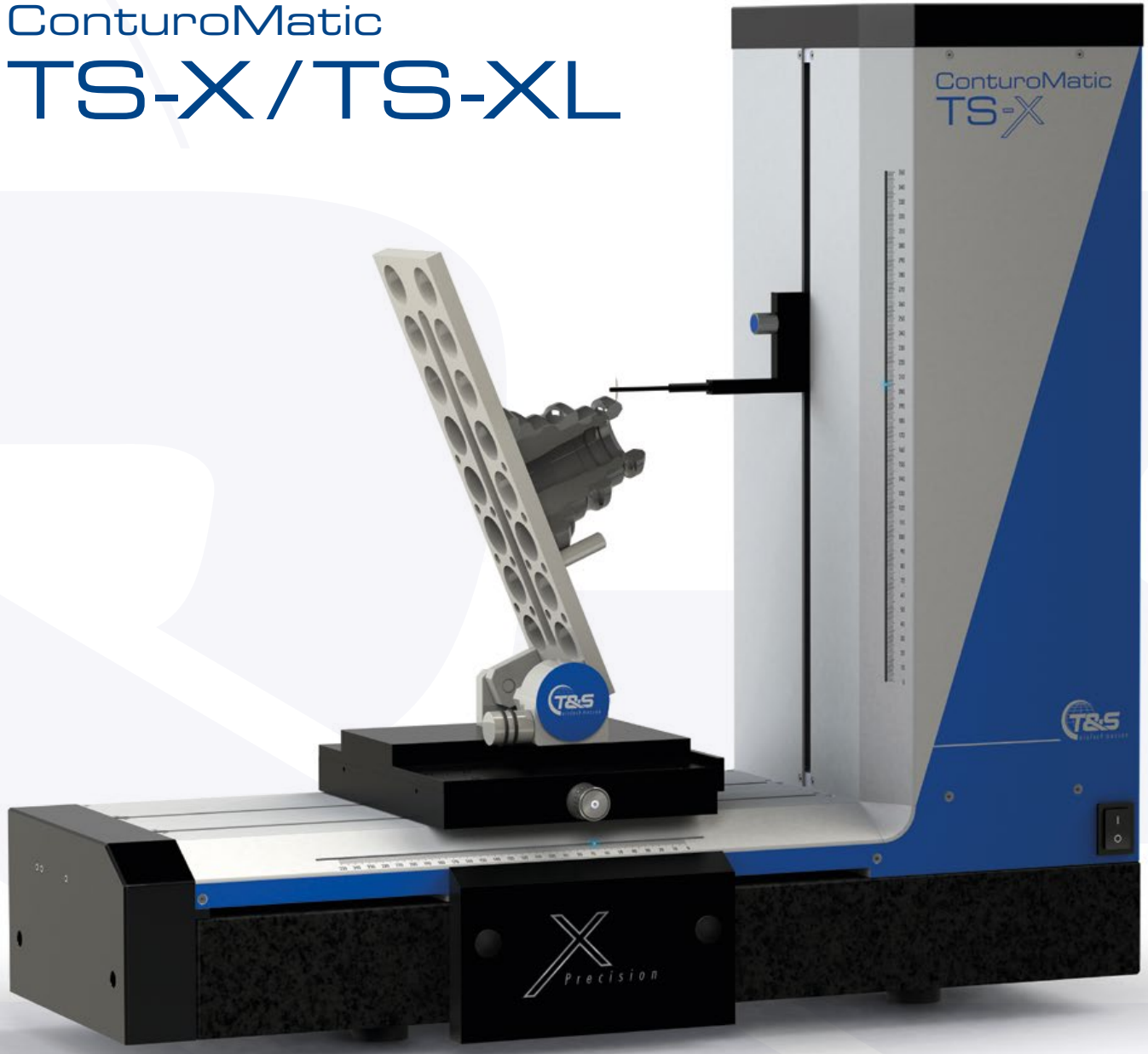

Precision
in large dimensions

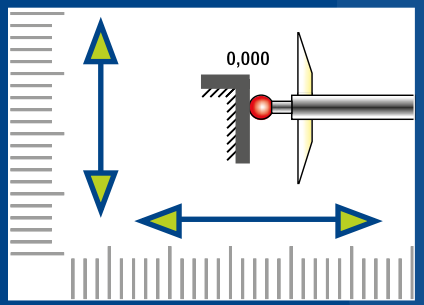

Our goal is solving unusual tasks in a simple way as a creative challenge. One example from our extensive collection of unusual problem solutions is the **ConturoMatic TS-X *move***.

The task:
Testing of contour and roughness on the raceway and flange of bearing rings in the diameter range 200-1200 mm with a workpiece weight of up to 150 kg.

Our solution: ConturoMatic TS-X *move*

Based on the proven concept of our aerostatic beared **TS-X HD**, the concept for high-precision testing of large and heavy workpieces was developed. For this purpose, the entire Z-axis was mounted on an air-bearing carriage that can be moved in the X-direction. A robust and flexibly adjustable part fixture serves as a ring fixture. For functional testing the recording base can be adjusted from 0°- 60° and is finely adjustable in Y-direction for zenith search. The centrally fixable pull-down vice integrated in the device considerably extends the range of application. The **TS-X *move*** is thus able to additionally fulfill all common standard measuring tasks in the field of contour and roughness measurement.

Features of the TS-X *move:*

- Friction-free, aerostatic special air bearings in the X and Z axis
- Increased measuring range: 370 x 350 mm
- Hybrid ceramic probe arm bearing
- Static probing and measuring point mounting in X-direction
- Roughness testing module in the standard scope of delivery
- Contactless, incremental measuring systems on steel base
- Measuring system resolution: 1 nm
- Error limit: ± (0.85 + L/100) µm [L = measuring path in mm] (without changing the scanning direction)
- Combined contour and roughness measurement throughout the measuring range possible
- Software basis ConturoMatic: W10/64Bit

ConturoMatic TS-X *move* Roughness:

- Measurement of surface roughness (mechanical principle of reference surface measurement)
- Measuring range roughness: 370 x 350 mm
- Effective resolution: 1 nm
- Measuring speed: 0.1-0.5 mm/s
- Measuring force: 7.5 mN (variably adjustable)
- Measuring point distance: approx. 0.5 µm
- Suitable for roughness: Rz > 0.5 µm, Ra > 0.05 µm
- Accuracy: 5%

See page 16 for a description and scope of functions.

ConturoMatic TS-X move

Our small one
for the big tasks

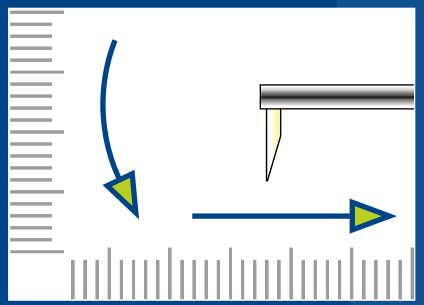

Our concept: focus on the essential.
The **ConturoMatic CV120** is a classic contour measuring device that convinces with smart functions and sensible automation. It offers everything a powerful and reliable contour measuring system needs.

Originally developed to control the quality of individual production processes, our **CV120** with its robust mechanics and high-performance software does a great job in the measuring lab too. Workpieces can be automatically measured within the entire measuring range. The complete calibration process of the traverse unit is fully automated. High measuring precision, detailed assessment, very simple operation and an outstanding price make the **CV120** particularly attractive. We offer these with a stone or aluminum (for mobile use) base plate.

Are you still using a contour measuring device with outdated technology?
Regardless of the manufacturer, we offer our "**ConturoMatic CV120**" as a retrofit system. You can continue to use all existing components that are still functional, such as X-Y adjustment table, stone slab and vice. We provide the necessary components to adapt our **CV120** and thereby you gain a modern measuring device in accordance with the current state of the art at an unbeatable price / performance ratio.

Technical specifications:

- External control via standard USB interface
- Measuring range CV120: 30 x 120 mm
- Positioning range of the Z-column: 380 mm
- Software-controlled tracing arm lifting function
- Automatic measuring via teach-in programming
- Even extremely large and heavy parts can be measured
- All axis movements can be automated
- Simple change of the tracing arm
- Calibration standard for dynamic X/Z-calibration in the scope of delivery
- Available as mobile system with vertically adjustable X-axis, for measuring contours of large work pieces while they are still in the machine (e.g. on the production line of large bearing rings)
- Software basis ConturoMatic: W10/64Bit
- All-in-one PC with touchscreen *(Option)*

ConturoMatic
CV120

Our big one

for measurement laboratories and production monitoring

Our ConturoMatic CV300, the coherent extension of the proven principle of our CV120.
The same applies here: focus on the essential. With its measuring distance of 100 x 300 mm, the **CV300** offers the possibility to reliably inspect contours of even larger and heavier workpieces.
The **ConturoMatic CV systems** are classic contour measuring devices that convince with smart functions and sensible automation. They offer everything a powerful and reliable contour measuring system needs.

Are you still using a contour measuring device with outdated technology?
Regardless of the manufacturer, we offer our **ConturoMatic CV300** as a retrofit system. You can continue to use all existing components that are still functional, such as X-Y adjustment table, stone slab and vice. We provide the necessary components to adapt our **CV300** and thereby you gain a modern measuring device in accordance with the current state-of-the-art at an unbeatable price / performance ratio.

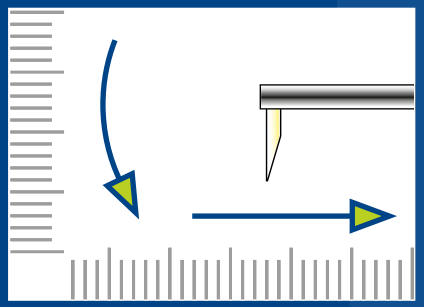

Technical specifications:

- External control via standard USB interface
- Measuring range CV300: 100 x 300 mm
- Positioning range of the Z-column: 400 mm (optional 600 mm)
- Software-controlled tracing arm lifting function
- Automatic measuring via teach-in programming
- Even extremely large and heavy parts can be measured
- All axis movements can be automated
- Simple change of the tracing arm
- Calibration standard for dynamic X/Z-calibration in the scope of delivery
- Available as a mobile system with vertically adjustable X-axis, for measuring contours of large workpieces while they are still in the machine (e.g. on the production line of large bearing rings)
- Software basis ConturoMatic: W10/64Bit
- All-in-one PC with touchscreen *(Option)*

ConturoMatic
CV300

Just rent

ContuRent®

Renting instead of buying – a concept that pays off

Take advantage of the extensive benefits that result for your company:

- Renting allows an order-related investment
- Suitable for relieving short-term bottlenecks of existing measurement systems
- Competitive advantage when submitting your bid – Renting allows an easy cost per piece calculation
- Low capital commitmentcosts only for the duration of use
- Save your liquidity and collateral for other projects – No financial risk when renting a machine
- Immediately deductible operating expenses – The asset is not capitalized in fixed assets
- Planning security – constant rates over the agreed term means no surprise costs
- Option to buy – Would you like to own the system after the rental date? No problem!
- Periodic maintenance included in the rental costs
- If desired, we can provide project specific „full service“ solutions which may include tailored workpiece mounts, measurement program creation and operator training
- Our rental systems are always up to date
- Suitable for school and training projects – procure the system solely for the relevant training sections
- Short and long term rentals possible

ConturoMatic S1
Software

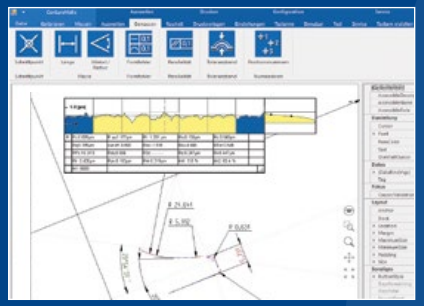

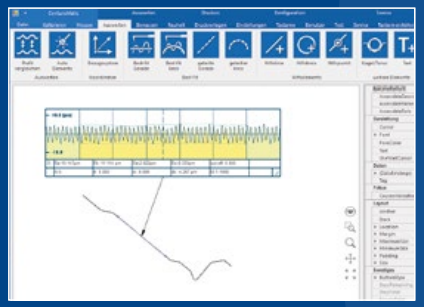

The user's needs have always been at the very top of our list of requirements.
Our guiding principle has always been: contour measurement must be quick and easy.
The trick is a combination of simple and intuitive operation of the system with unlimited diversity in performance.

Our solution: the ConturoMatic S1 software evaluation.
The operating concept of **ConturoMatic S1 software** is ideal for both quality control on the production area and in the laboratory. All contour and roughness measuring devices are generally based on the profile method. Therefore, we have developed a consistent software basis as an interface to the user.

Higher efficiency via continuous development:
We maintain close communication with our users. Quick and expedient integration of our customers' suggestions makes continuous optimization of our software solution possible.

Benefits at a glance:

Simple measurement:

- All evaluation functions can be achieved by a single mouse click, without any elaborate menu bars and sub-functions
- In production monitoring, operator-independent and therefore operator error-free evaluations and tolerance comparisons can be carried out fully automatically
- Each measurement carried out generally contains everything needed to turn it into an automatic test process to include analysis. Teach-in in its purest form
- Three basic steps lead to automated inspection: measurement, evaluation, storing

More accurate measurement:

- Parts that were difficult to measure before can now be dimensioned clearly and reproducibly
- The software is form and position tolerant in a wide range

Ready for the future:

- Our ConturoMatic software is the basis of our TS and CV systems and continuously under development
- We provide our customers with free software updates and extensions

ConturoMatic S1 function excerpt

- Creation of basic coordinate systems
- Regression line, single- and multi-part
- Regression circle, single- and multi-part
- Start and end angle fixing for regression circle
- Start and end fixing for regression line
- Calculation of radius, distance, angle, incline, ...
- Angle display in °/'/", decimal, incline µ/mm
- Generation of auxiliary elements, circle, line, point, coordinate grid, parallel line, vertical line, angle bisector, angle line, ...
- "Fixed circle" fitting
- Intersection generation line/line
- Intersection generation auxiliary line/contour
- Intersection generation line/radius
- Generation of free reference points
- Determine highest point
- Determine lowest point
- Variable vanishing point generation mm or %
- Regression line through x points
- Regression radius through x points
- Ball adjustment
- Torus adjustment
- Form deviation, graphically scalable in X+Z
- Radius deviation, graphically scalable in X+Z
- Parallelism
- Profile rotation
- Gothic profile evaluation (standard)
- Automatic dimensioning with tolerance assessment
- Integration of graphical information on the automatic test process
- Visual tolerance indicator
- DXF fitting
- Free text box
- Contour-bound text box
- Roughness measurement *(Option)*
- Extensive print processor
- Assign print templates to reference part measurements automatically
- Send prints jobs automatically after reference part measurements
- Output results in list form with tolerance evaluation
- Printout in portrait or landscape format
- Numbering of position valves
- Dynamic contour tracing
- Import data from third party systems using various standard formats
- Variable data export
- Automatic data export after measurement
- Export of results
- Export of raw data
- Export of DXF data
- Simple generation of autonomic measuring processes
- Smart tracing path optimization
- Grid lines can be displayed
- Dynamic axis scaling
- Individual color adjustment
- Software-assisted tracing arm calibration
- 12 selectable operating languages
- User administration
- Compatible with Windows W10/64Bit

CS ceramic styli

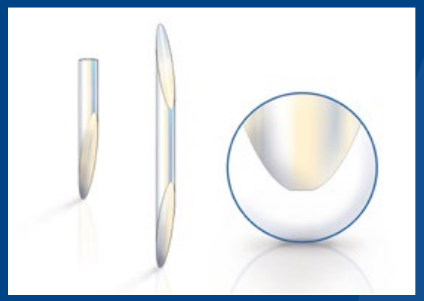

The connection between the surface and measuring device – often disregarded but still essential:
Slide friction, bending effects and tip shape are essential influences on the measured result.

Problems:

The slide friction between the stylus tip and workpiece surface causes bending effects during measurement. This effect is mainly corrected by tracing arm calibration - but a residual error that cannot be corrected still remains. In addition, several workpiece materials will also cause deviating bends in the stylus. These errors cannot be systematically corrected with reasonable effort. The only way out is by reducing friction.

Classic stylus tips:

A weakness of classic styli for contour measuring machines is the not clearly defined tip shape. The transition of various radii results in the fact that the required tip radius meets the requirements practically only at one point. The tip geometry is no longer defined outside of the axis.

CS ceramics stylus tips:

The problems caused by sliding friction, bending and tip shape are reduced by our patented **CS stylus tips**. The coefficient of friction of our **stylus tips** made of high-performance ceramics is significantly lower than that of carbide. Defined tip geometry prevents defective measured values caused by small positioning errors. The sum of our improvement measures results in a remarkable reduction of measurement uncertainty.

Benefits at a glance:

- Optimized patented tip geometry
- Significantly less time is required for precise placement at the workpiece
- Reduced friction as compared to carbide
- Electrically non-conductive
- Not magnetizable
- Resistant against attachment cutting
- Form-retaining stylus tip geometry
- The scanning element follows the test piece surface much more securely in the threshold area
- Consistently high product quality
- High-tech material
- Grain size reduced by 50% as compared to conventional carbide
- Extraordinarily high-wear resistance and hardness
- Reduced susceptibility to breakage
- Lower costs

Standard styli

One-way contour ceramic styli				
Stylus total length	Stylus Ø	Stylus angle	Tip radius	Item no.:
6 mm	1.0 mm	19°	25 µm	7181-04-CS42
9 mm	1.0 mm	19°	25 µm	7181-07-CS42
12 mm	1.0 mm	16°	25 µm	7181-082516
20.5 mm	3.5 mm	12°	25 µm	7181-03-CS42
33 mm	3.5 mm	12°	25 µm	7181-02-CS42
59.5 mm	3.5 mm	12°	25 µm	7181-01-CS42
One-way contour HM carbide styli, conical				
6 mm	1.0 mm	24°	25 µm	5730-08-k
20.5 mm	3.5 mm	24°	25 µm	5730-07
33 mm	3.5 mm	24°	25 µm	5730-02-k
Two-way contour ceramic styli				
2 x 5 mm	1.0 mm	19°	25 µm	7182-03-CS42
2 x 9 mm	1.5 mm	14°	25 µm	7182-02-CS42
2 x 16.5 mm	2.5 mm	12°	25 µm	7182-01-CS42
Two-way contour HM carbide stylus, conical				
2 x 5 mm	1.0 mm	24°	100 µm	6810-02-100-k
Diamond styli (roughness)				
1.5 mm	0.5 mm	60°	2 µm	7796
6 mm	1.0 mm	60°	2 µm	7903
10 mm	1.0 mm	60°	2 µm	7636-10
20 mm	1.0 mm	60°	2 µm	7636-2010
Two-way diamond stylus (roughness)				
2 x 5 mm	1.0 mm	60°	2 µm	7825
One-way contour stylus – ruby ball				
Stylus total length	Mounting thread	Shaft Ø	Ruby ball Ø	Item no.:
21 mm	M3	1	1.5 mm	7124
Two-way contour styli – ruby ball T-shape				
Stylus total length	Tracing arm shaft Ø	Shaft Ø	Ruby ball Ø	Item no.:
2 x 5 mm	3.0 mm	0.6 mm	1.0 mm	7487-01
2 x 5 mm	3.0 mm	1.0 mm	2.0 mm	7487-04
2 x 10 mm	3.0 mm	1.0 mm	1.0 mm	7634
Two-way contour styli – T-shape				
Disc Ø	Tracing arm shaft Ø	Disc angle	Tip radius	Item no.:
2.5 mm	1.0 mm	15°	25 µm	7184-101-L40
5 mm	2.0 mm	15°	25 µm	7184-102-L40

Information without warranty as of 2020.01.01

Further styli including stylus tips for third-party devices on request.

Tracing arms

Excerpt from our comprehensive range of products:

One-way contour tracing arm – short version – for ConturoMatic T1/T2/T3/TS/TS-UD/TS-X		
150/20.5	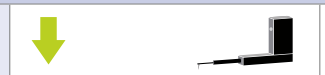	Item no.: 6829-02-2 Tracing arm total length 150 mm, stylus tip length 20.5 mm
150/6		Item no.: 6829-01-2 Tracing arm total length 150 mm, stylus tip length 6 mm
One-way contour tracing arm – long version – for ConturoMatic T1/T2/T3/TS/TS-UD/TS-X/CV250/CV250D		
260/6		Item no.: 6829-04-2 Tracing arm total length 260 mm, stylus tip length 6 mm
260/33		Item no.: 6829-05-2 Tracing arm total length 260 mm, stylus tip length 33 mm
260/59.5		Item no.: 6829-06-2 Tracing arm total length 260 mm, stylus tip length 59.5 mm
Two-way contour tracing arm – short version – for ConturoMatic T1/T3/TS-UD/TS-X		
150/2x5		Item no.: 6829-08-2 Tracing arm total length 150 mm, stylus tip length 2 x 5 mm
150/2x9		Item no.: 6829-21-2 Tracing arm total length 150 mm, stylus tip length 2 x 9 mm
150/2x16.5		Item no.: 6829-33-2 Tracing arm total length 150 mm, stylus tip length 2 x 16.5 mm
190/2x1.25 Disc		Item no.: 6829-24 Tracing arm total length 190 mm, stylus tip length 2 x 1.25 mm
Two-way contour tracing arm – long version – for ConturoMatic T1/T3/TS-UD/TS-X		
260/2x10x1.0 Ruby		Item no.: 6829-47 Tracing arm total length 260 mm, stylus tip length 2 x 10 mm and ruby ball Ø1.0 mm
260/2x16.5		Item no.: 6829-10-2 Tracing arm total length 260 mm, stylus tip length 2 x 16.5 mm

Two-way contour tracing arm – short version – for ConturoMatic T3/TS-UD/TS-X		
150/2x9x1.5 Ruby		Item no.: 6829-87-2 Tracing arm total length 150 mm, stylus tip length 2 x 9 mm and ruby ball Ø1.5 mm
One- or two-way – Roughness tracing arm – for ConturoMatic T1-R/TS-R/TS-UDR/T3/TS-X		
190/6	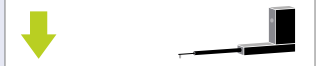	Item no.: 6829-65-1.0 Tracing arm total length 190 mm, stylus tip length 6 mm diamond 60° 2 µm
190/2x5	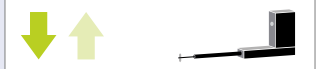	Item no.: 6829-89 Tracing arm total length 190 mm, stylus tip length 2 x 5 mm diamond 60° 2 µm
One-way contour tracing arm for ConturoMatic CV120		
120V/6.0		Item no.: 8769-0001 Tracing arm total length 120 mm, stylus tip length 6 mm
120V/20.5		Item no.: 8769-0002 Tracing arm total length 120 mm, stylus tip length 20.5 mm
One-way contour tracing arm for ConturoMaric CV300		
300V/6.0		Item no.: 10151-0001 Tracing arm total length 360 mm, stylus tip length 6 mm
300V/33		Item no.: 10151-0005 Tracing arm total length 360 mm, stylus tip length 33 mm
Examples for special tracing arms		
200/90°/20.5		Item no.: 6829-11 Tracing arm total length 200 mm, 90° angled stylus tip length 20.5 mm
200/2x33 HG		Item no.: 6829-145 Tracing arm total length 200 mm, stylus tip length 2 x 33 mm 20° inclined tips – forward

On request, we will be pleased to provide you with custom tracing arms to fit your measuring needs.

Technical specifications

ConturoMatic	TS / GS	TS-X (HD) / GM-X	TS-XL	TS-X *move*	CV120	CV300	Comment
ConturoMatic system data							
Measuring range-X ←→	250 mm	280 mm	360 mm	370 mm	120 mm	300 mm	
Measuring range-Z ↑↓	320 mm	350 mm	550 mm	350 mm	30 mm	100 mm	
Scanning direction ↓	✓	✓	✓	✓	✓	✓	
Scanning direction ↑	•	✓	✓	✓	–	–	
Measuring direction ←→	✓	✓	✓	✓	–	–	
X-scanning ⇤ ⇥	–	✓	✓	✓	–	–	
Measuring speed	0.1-3.0 mm/s				0.03-1.75 mm/s		
Auto speed optimization	✓	✓	✓	✓	–	–	
Positioning speed	up to 25 mm/s				up to 25 mm/s		
Measuring system(s)	visually incremental				digital	digital	
Measuring data processing	digital						
Measuring system resolution	0.001 µm	0.001 µm	0.001 µm	0.001 µm	0.01 µm	0.01 µm	
Guide elements	mechanic	aerostatic	aerostatic	aerostatic	mechanic	mechanic	
Table load max.	35 kg	25 kg (50 kg TS-X HD)	50 kg	150 kg	30 kg	75 kg	centrically load
Error limits *							
Total error	+/-(0.9+L/100) µm	+/-(0.85+L/100) µm	+/-(0.85+L/100) µm	+/-(0.85+L/100) µm			per scanning direction L = measuring path in mm
X-axis	+/-(0.75+Lx/100) µm	+/-(0.5+Lx/100) µm	+/-(0.5+Lx/100) µm	+/-(0.5+Lx/100) µm	+/-(1.2+2Lx/25) µm	+/-(1.0µm+Lx/25) µm	Lx = X - measuring paths in mm
Z-axis	+/-(0.75+Lz/100) µm	+/-(0.5+Lz/100) µm	+/-(0.5+Lz/100) µm	+/-(0.5+Lz/100) µm	+/-(1.8+2Lz/25) µm	+/-(1.5µm+2Lz/25) µm	Lz = Z - measuring paths in mm
Guide accuracy without guide correction	(0.15+L/100) µm	(0.08+L/100) µm	(0.08+L/100) µm	(0.08+L/100) µm	(1.5+L/25) µm	(1.2+L/25) µm	L = measuring paths in mm
Measuring point distance in X	0.5 - 25 µm	0.5 - 10 µm	0.5 - 10 µm	0.5 - 10 µm	0.5 - 17 µm		
Radius measurement	± 0.005 % of the NV at R12.5 mm				± 0.05 % of the NV at R12.5 mm		NV = nominal value
Distance measurement	+/-(1.2+L/100) µm				+/-(1.8+L/25) µm		
Angle measurement	≤ 30“	≤ 20“	≤ 20“	≤ 20“	≤ 2´		
ConturoMatic Software							
Contour	✓	✓	✓	✓	✓	✓	
Diameter	•	✓	✓	✓	–	–	
NC-Automatic measurement	✓	✓	✓	✓	✓	✓	
NC-Automatic assessment	✓	✓	✓	✓	✓	✓	
Roughness							
Availability	•	✓	✓	✓	–	–	
Measuring range Z/X	1.0/250 mm	350/280 mm	550/360 mm	350/370 mm	–	–	
Application ranges Ra	Ra ≥ 0.1 µm	Ra ≥ 0.05 µm	Ra ≥ 0.1 µm	Ra ≥ 0.05 µm	–	–	
Application ranges Rz	Rz ≥ 1.0 µm	Rz ≥ 0.5 µm	Rz ≥ 0.8 µm	Rz ≥ 0.5 µm	–	–	
Measuring point distance	ca. 0.5 µm	ca. 0.5 µm	ca. 0.5 µm	ca. 0.5 µm	–	–	
Accuracy	5% MV	5% MV	5% MV	5% MV	–	–	MV = measured value
Measuring speed	0.1 mm/s	0.1 - 0.5 mm/s	0.1 - 0.5 mm/s	0.1 - 0.5 mm/s	–	–	
Measuring force	7.5 mN	7.5 mN	7.5 mN	7.5 mN	–	–	

* Conditions according to T&S specification • = Option – = not available

Information without warranty as of 2020.01.01

Accessories

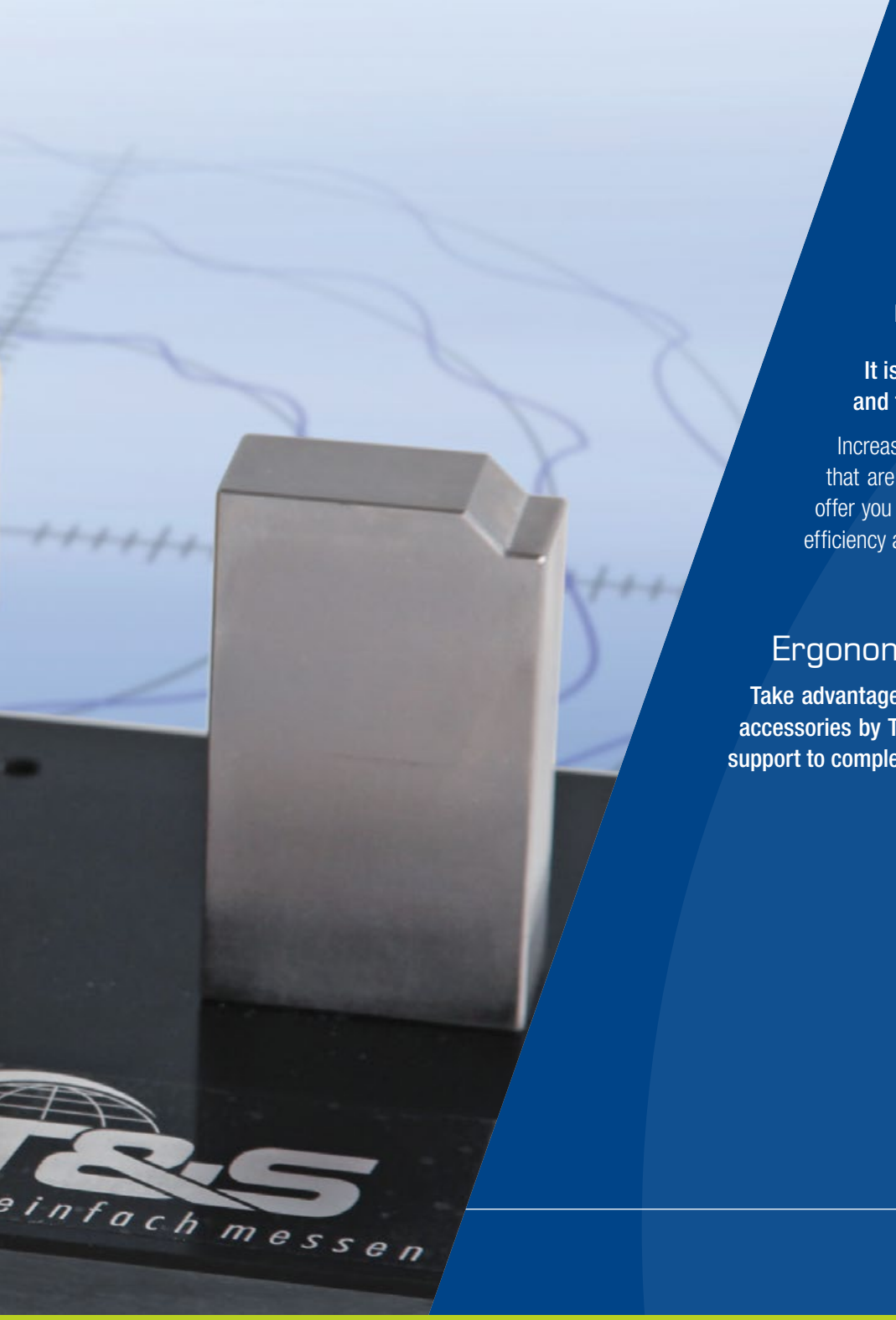

Quality assurance

more than the use of suitable measuring equipment

It is the optimal combination of reliable measuring instruments, ergonomic operation and the use of functional accessories.

Increasing demands in terms of flexibility, cost pressure and short set-up times call for accessories that are suitable for universal use and highly efficient in operation. Professional auxiliary systems offer you clear differentiation from the competition, for example in the form of flexibility, safety, cost efficiency and high-speed responsiveness.

Ergonomics ultimately leads to stress-free, effective working.

Take advantage of our extensive know-how and forward-looking products. Measuring instrument accessories by T&S stand for tailor-made, ergonomic, innovative concepts, from simple workpiece support to complex, intelligent measuring equipment.

Centering & clamping devices

How does the workpiece get onto the measuring instrument?

Modern manufacturing processes enable qualities whose testing reaches the limits of measuring instrument accuracy. A major proportion of the uncertainties associated with testing is still very much attributable to the workpiece holder. The precise clamping and alignment of test specimens in measuring devices is often also a very time-consuming undertaking. But time is money – especially in the manufacturing industry.

And above all,
faulty test specimens that are not identified due to inaccurate measurements have a negative impact on product quality and image.

Even more important is the correct workpiece holder, as it plays a key role in determining the quality of a measurement. It is not possible to achieve a correct measurement result without the exact positioning of the test specimen. It is a fact that in practice a high proportion of the achievable measurement certainty is lost due to inadequate positioning in the measuring instrument. To counteract this, we have developed a number of centering and clamping systems specifically for use in quality assurance. The main areas of application are contour measurement systems, form measuring machines, coordinate measuring equipment and optical testing devices.

Centering and clamping systems by T&S are specifically designed for use on testing machines and guarantee precise measurement results. If our standard is not sufficient, we will find a custom solution for your specific needs.

The advantages of our centering and clamping systems:

- Flexibility
- Simple, quick handling
- High precision, which generally makes re-centering unnecessary
- Robustness, designed for use in close proximity to production
- Variable clamping force for centering thin-walled parts

Centering & clamping devices

UZ series

Universal, patented system for external and internal centering of round test specimens. The guide of the UZ corresponds to a non-linear curve. As a result, we achieve an outwardly increasing centering force. Larger, also usually heavier test specimens are centered with a greater force than small, light workpieces. The dowel pins are secured by means of threads and can be adapted for specific tasks. An adapter plate for fastening common form measuring devices to rotary machine tables is included in the delivery package.

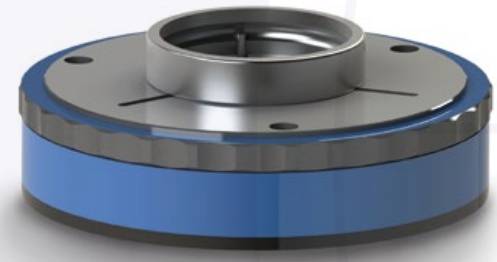

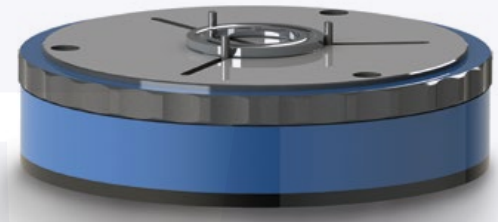

UZ-160 for external and internal centering of round specimens up to a diameter of 145 mm

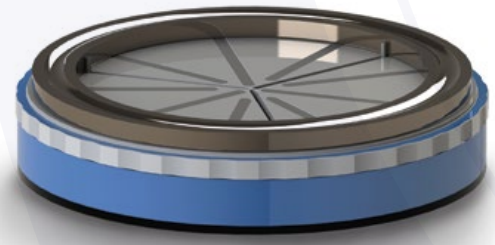

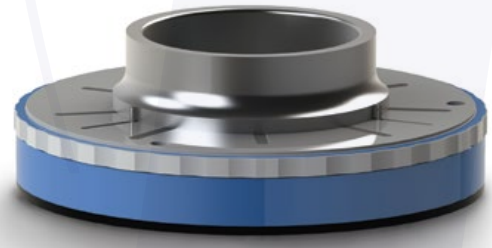

UZ-240 for external and internal centering of round specimens up to a diameter of 230 mm with integrated magnetic strips *(Option)*

UZ-160 centering areas

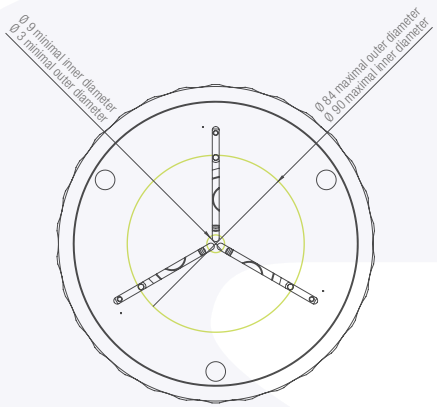

Dimensions with centering pins in the inner position

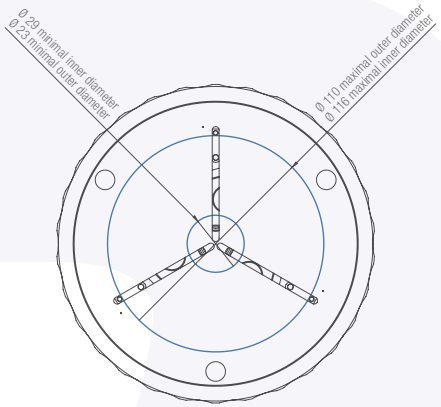

Dimensions with centering pins in the outer position

UZ-240 centering areas

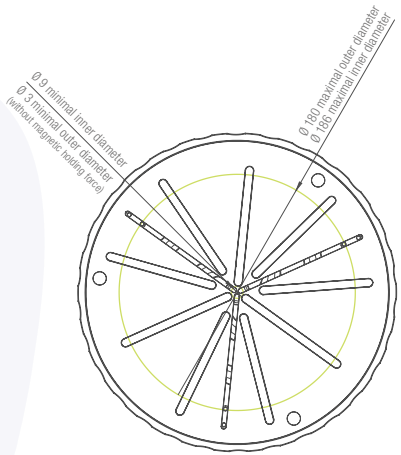

Dimensions with centering pins in the inner position

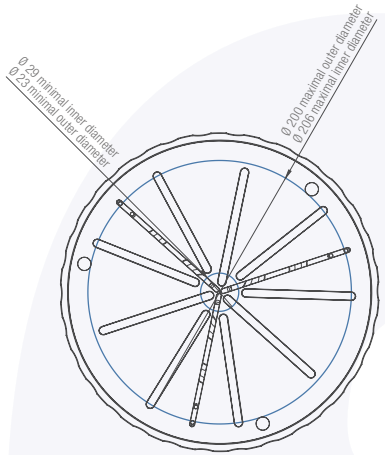

Dimensions with centering pins in the outer position

Application range

		UZ-160	UZ-240
DA	Outer Ø of device	Ø 160 mm	Ø 240 mm
H	Height without dowel pins	40 mm	42 mm
DP	Ø of support surface for test specimen	Ø 145 mm	Ø 230 mm
di	Ø centring area, internal	Ø 9 – 116 mm	Ø 9 – 206 mm
da	Ø centring area, external	Ø 3 – 110 mm	Ø 3 – 200 mm

Centering & clamping devices

AZ series

Centering device designed as a centering and positioning aid for installation on form measuring devices. By rotating the outer ring, three arms are moved centrically to the centre of the holder. The arms are kept under tension by means of a spiral spring and thereby centre the test specimen. Due to the good mechanical performance, postcentring is generally unnecessary or is kept to a minimum. The low centring forces also permit the clamping of thin-walled parts without mechanical deformation.

Customised designs on request, such as:

- Height-adjustable centering arms
- Centering arms with location holes for clamping discs, etc.
- Workpiece support plate with magnetic strips

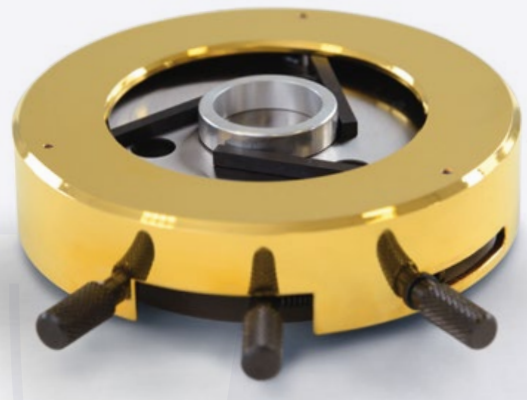

AZ-1

KZT series

Centering and tilting table for X-Y axle adjustment and leveling. The adjustment unit is carried manually by fine thread spindles. For each axis, the position and the inclination can be adjusted. Optionally, we can supply our KZT with adapted centering unit UP/AZ.

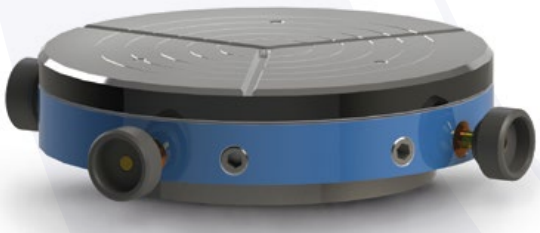

KZT-160 centering and leveling table

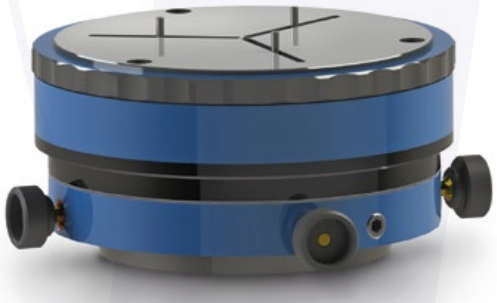

KZT-160 with adapted UZ-160

ZS series

Angle-adjustable, centrical clamping vice with radial rotary holder. Due to centrical clamping, the measuring axis of symmetrical workpieces remains in the measuring axis at all times. Constant repositioning of the workpiece holder for different test specimen dimensions is therefore no longer necessary. Our ZS vice is optionally available with a radial rotary unit and angle adjustment via worm drive. The movement axes can be clamped in the respective position.

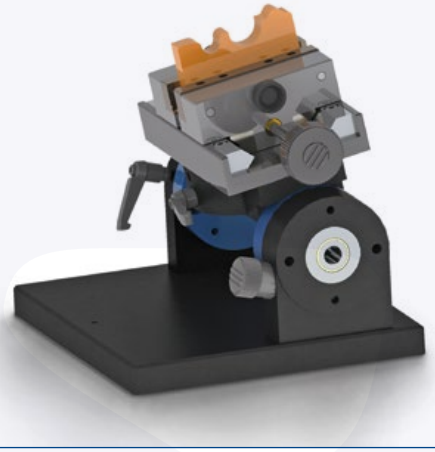

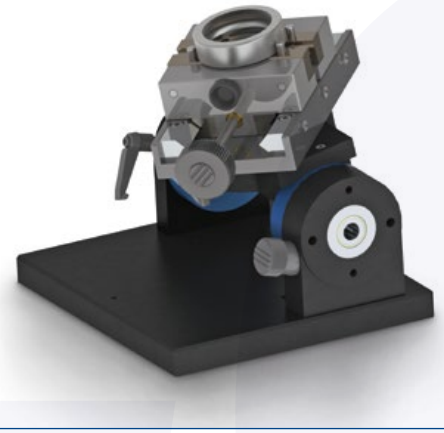

ZSR-60 jaw width 60 mm

Tiltable and rotatable vice

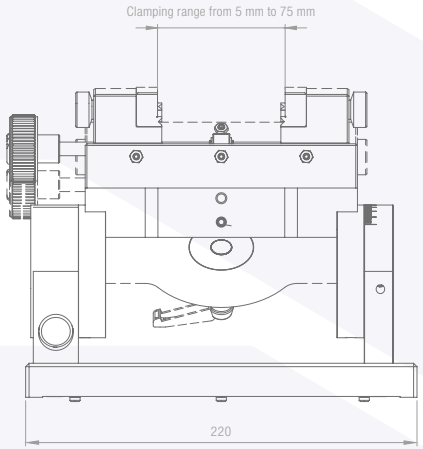

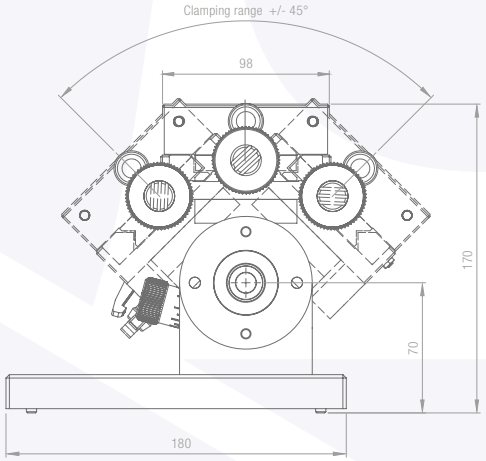

ZSR-60

Workpiece holders

WS series

Angle-adjustable universal clamps for the positioning of bearing rings on contour measurement systems. The central groove allows the measuring probe to pass through to behind the workpiece. The tilting movement of the workpiece is facilitated by means of a worm drive.

For the support, a movable prism and support bolts are included in the delivery package.

To prevent the tilting of the test specimen, a movable, spring-loaded retaining element is integrated into the device. Optionally available are resilient reference spheres for dimensional determination to the rear end face and magnetic inserts for securing the part placed on top.

The fixture can be rotated 360° in the plane, positioning with friction wheel, can be fixed by toggle clamping. Reading of the angle of rotation via scale with nonius.

Optional: with motorized adjustable tilting axis. This function can be integrated into automatically running measuring programs of our ConturoMatic T-systems.

WSE-300

WSF series

Angle-adjustable, three-jaw chuck with axial DP rotary unit.

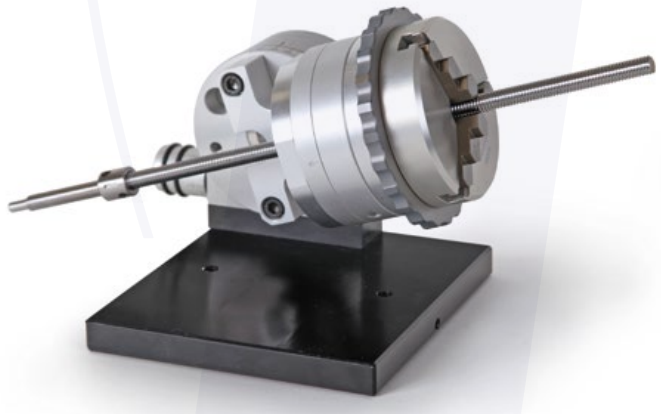

WSF

WP/WPS series

Part support on parallel shafts (WP) as an alternative to fixed prisms and prisms with adjustable inclination angles (WPS). The advantages of this design are the low weight, large scope of application (Ø 25–350 mm), accessibility from above and below, and easy handling. We can supply shiftable stops as an option.

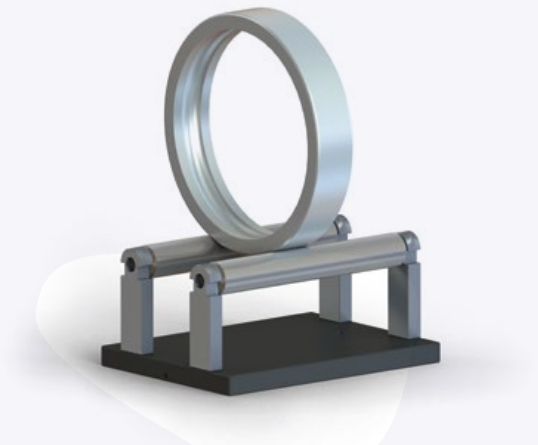

WP-100

WPS

SG series

Radial rotary unit for angle adjustment with ergonomically slanted drive wheel. Reading of the swivel angle is carried out via the laser-etched scale. The rotary axis can be fixed in the set position via a clamping lever.

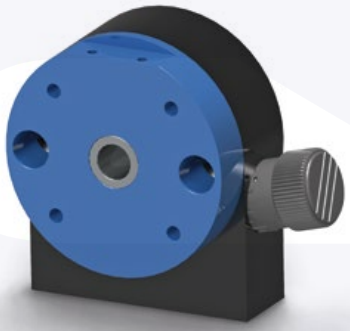

SG-1

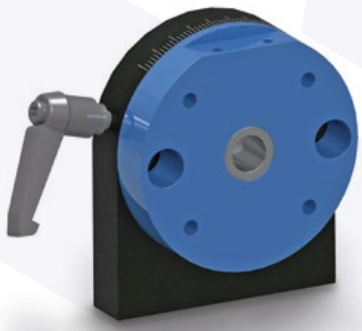

SG-2

DP series

Radial rotary unit for angle adjustment with angle scale. The rotary axis can be fixed in the set position via a clamping lever.

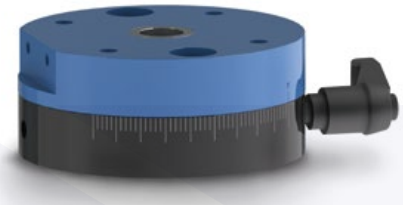

DP-1

Centering & clamping devices

VZ series

Battery-powered vacuum centering and clamping system with integrated, low-vibration special vacuum pump for rotary table systems. For test specimens which cannot be clamped using usual methods. For example, small or flat parts, balls, bolts or pins wich have to be inspected along their entire length, asymmetric parts, etc..

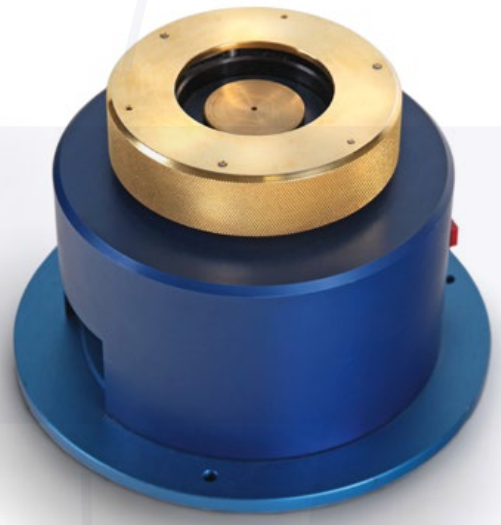

VZ-1 with AZ1 centering system

Benefits at a glance:

- Flexibility
- Simple, quick handling
- High precision, which generally makes re-centering unnecessary
- Robustness, designed for use in close proximity to production
- Variable clamping force for centering thin-walled parts

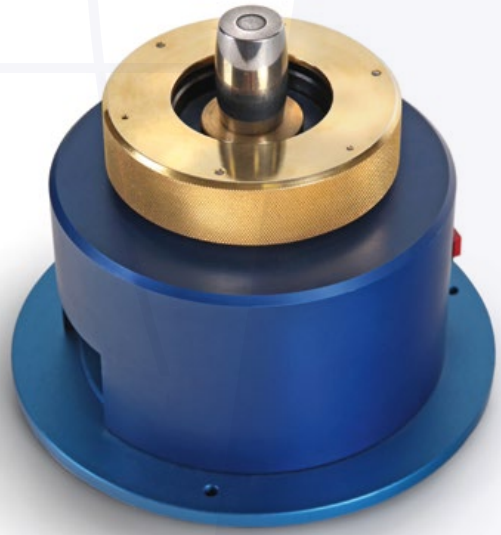

VZ-1 with AZ1 centering system – example of use

Calibration standards

Contour and roughness standards

Each measuring instrument is only as good as its reference. For self-monitoring of the accuracy and testing of contour measuring instruments, for instance in accordance with VDI/VDE 2629, we offer a wide range of contour and roughness standards. Depending on the type, our standards are manufactured from hardened, aged gauge steel or carbide. Our standards are optionally available with an almost diamond-hard, extremely wear-resistant surface coating. Stable mounting blocks or mounts with finely adjustable inclination axes are available for the safe support of our standards.

DAkkS-Kalibrierlabor

Deutsche Akkreditierungsstelle GmbH

Deutschen Kalibrierdienst

We can offer you the following test certificates for our standards:

- Manufacturer‘s certificate *(standard)*
- DAkkS certificate
- PTB calibration certificate

KN180

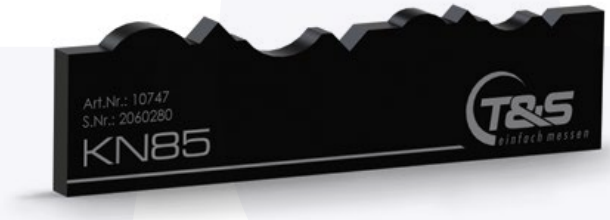

KN85

KRN60

KN15

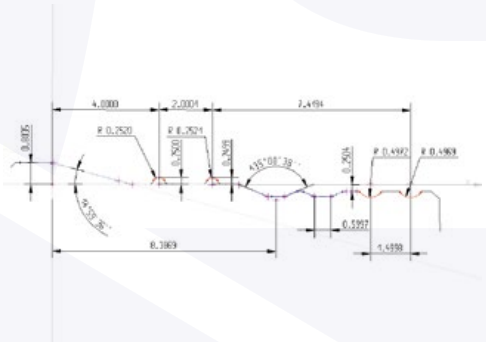

Commutator testing systems

Commutator testing systems – worldwide

We are a worldwide leading developer and manufacturer of systems for dynamic and geometrical testing of electric motor rotors. Our range extends from inexpensive universal testing devices for production monitoring, through 100% in-process measurement in the production line with measurement times of less than two seconds, to intelligent measurement stations that adjust automatically to the respective test specimen type.

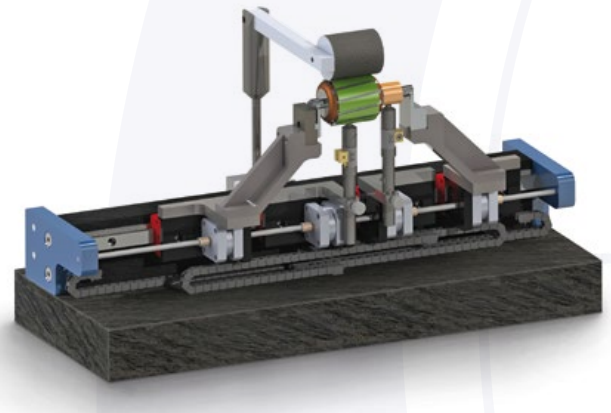

KP-500 with automatic positioning of the sensors and support prisms

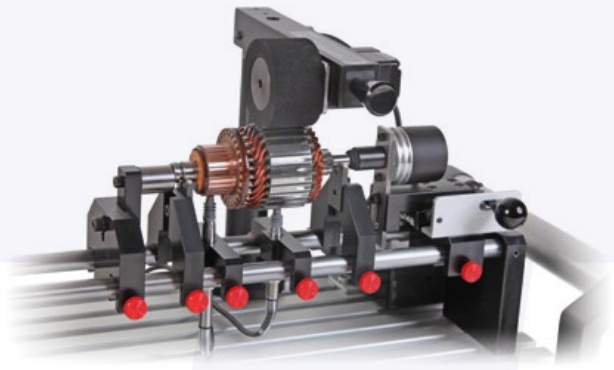

Commutator testing devices

CommutatorMatic mechanics and sensor technology

- **Novelty:** Test station with measuring elements and support prisms that automatically adjust to the respective test object type
- **Novelty:** Dynamic rotor testing of the angular offset from the collector to the skewed sheet metal stack
- Robust, modular mechanics and ergonomic operation
- Easily adjustable elements
- Unrivalled short changeover time
- Modular design
- Easy adaptation to extended measuring tasks
- Integration of external testing systems e.g. for roughness testing
- Dynamic T&S USB Interface
- Dynamic data acquisition of inductive displacement transducer signals with up to 4000 MW/s simultaneously on up to 8 channels
- Integration of almost all common displacement transducers and interfaces
- Tactile and non-contact laser sensors adaptable
- Control of various motor controls
- Communication with SPS of production lines
- Data exchange with superior CAQ systems
- Variable I/O for integration of remote-control switches

kommutator.info Software

- Integration of almost all common calculation algorithms for commutator geometry
- Numerical and graphical display of results, graphical display of tolerance violations
- Linear, polar or a combined representation
- SPC evaluation, CAQ data export, communication with the PLC of production lines
- Display of results as table
- User administration
- Communication with the production PLC, status display of control inputs and outputs

Evaluation of the parameters:

- Web jump and delta bar; also on the encapsulated commutator
- Segment shape deviation
- Commutator concentricity & roundness
- Commutator diameter, package diameter
- Concentricity to shaft
- Concentricity at the encapsulated commutator
- Shaft roundness and shaft diameter
- Angular offset to the laminae package
- Package concentricity as well as concentricity on encapsulated packages
- Welding hook height

Customized measurement technology

Your requirements demand an individual solution?

No problem! From the auxiliary fixture to the automatic testing machine with special software – our experienced specialists for special systems will find a suitable solution.

UM series

Universal system with motorized positionable Z-axis.

Applicable for motorized height positioning with variable speed of:

- Roughness measuring devices
- CCD measuring cameras
- Analogue and digital microscopes
- Probes
- Laser sensors, etc.

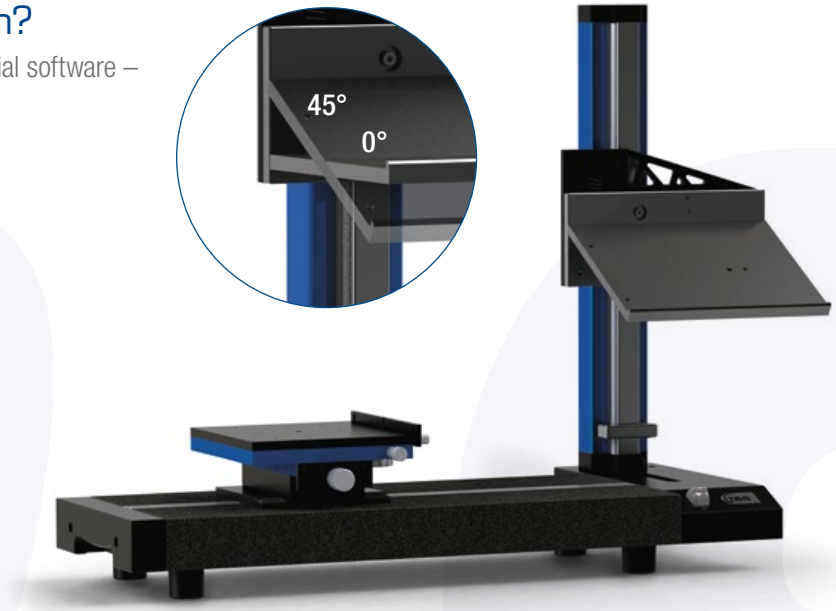

UM-500 with X-Y-R-supporting table

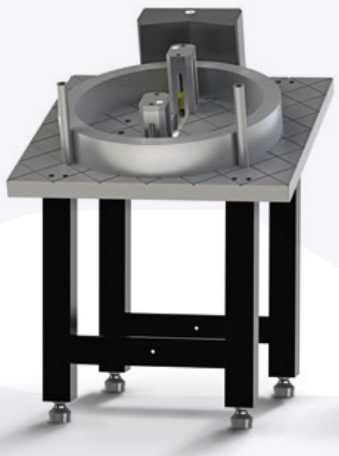

Bearing diameter inspection by laser

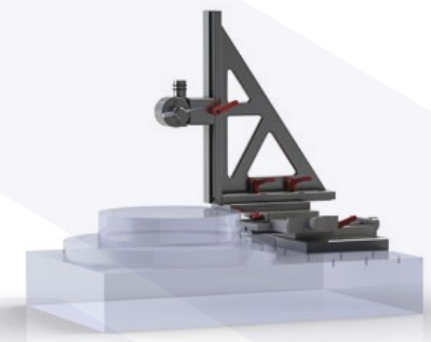

Adjustable probe holder

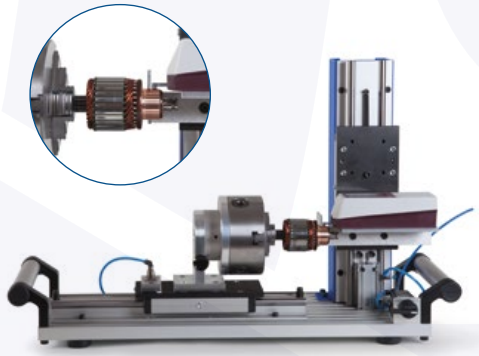

Rotary holder for roughness testing

Centric clamping mini vice

T&S customer service

Assistance when it matters

It's great when everything is running smoothly. However, if problems do arise, we offer customised solutions! It´s not enough for us to deliver technically outstanding products, our service know-how and customer support is first-class too.

Additionally, we place special importance on robustness and longevity when developing products. T&S is dedicated to the principle of technology "Made in Germany" and mainly cooperates with local partners and suppliers. This not only assures quality but in particular warrants short delivery and turnaround times.

After-sales-service

We are available for support and advice and will use our combined practical know-how gained from more than 30 years of experience and several thousand of delivered systems across the world. You can reach us by phone or email during our business hours. If required, our technicians will come to your site personally.

ISO 9001:2015-certification
Certified by
DEKRA Certification GmbH

What you can expect from us

- A friendly, helpful and competent service team
- Project management by our technical sales department
- T&S in-house repair service with transport organization
- Technical customer service for on-site repairs
- Maintenance contracts with schedule monitoring by us
- User and follow-up training at T&S or at your site
- Free-of-charge technical customer service over the phone and by email
- Loan equipment to cover repair times where possible
- Global customer service
- Tracing arm repair service
- Free software updates

Contact us!

Phone +49 (0)9725 7106-0 or info@ts-messtechnik.de

T&S Gesellschaft für Längenprüftechnik mbH assumes no warranty for the information in this product catalog being up to date, correct, complete or for its quality.

Nr. 8075
T&S

T&S Gesellschaft für Längenprüftechnik mbH

Rhönstrasse 2a
97490 Poppenhausen
Germany

Phone +49 (0)9725 7106-0
Fax +49 (0)9725 7106-33

info@ts-messtechnik.de

www.ts-messtechnik.de

just measure

T&S Gesellschaft für Längenprüftechnik mbH assumes no warranty for the information in this product catalog being up to date, correct, complete or for its quality.
This catalog supersedes all previous editions, which thereby become invalid.

Last updated: 2020/01

Design by www.pantaris.de – © by T&S Gesellschaft für Längenprüftechnik mbH